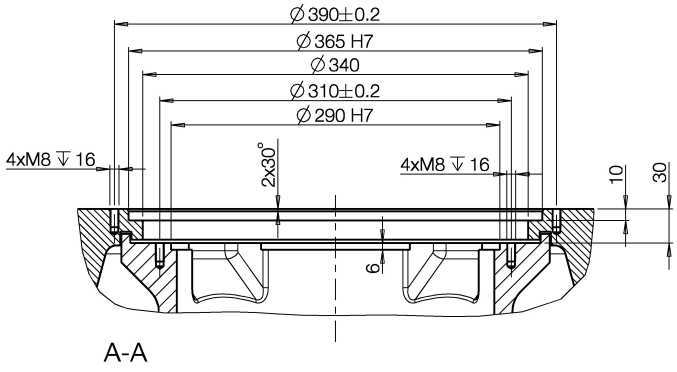
∅390±0.2
∅365 H7
∅340
∅310±0.2
∅290 H7
4xM8 ↧16
2x30°
4xM8 ↧16
10
30
6

A-A

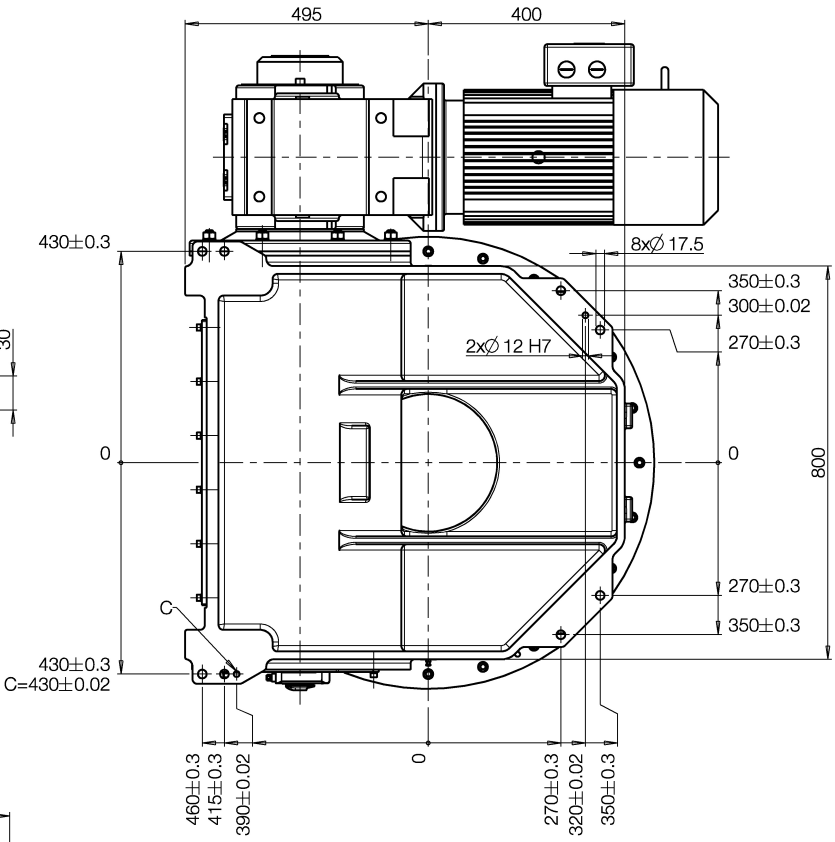
495
400
430±0.3
8x∅17.5
350±0.3
300±0.02
270±0.3
2x∅12 H7
0
0
800
270±0.3
350±0.3
C
430±0.3
C=430±0.02
460±0.3
415±0.3
390±0.02
0
270±0.3
320±0.02
350±0.3

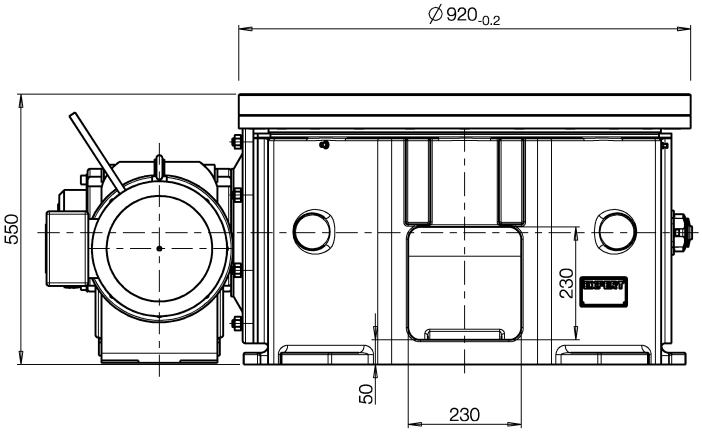
∅920-0.2
550
230
50
230

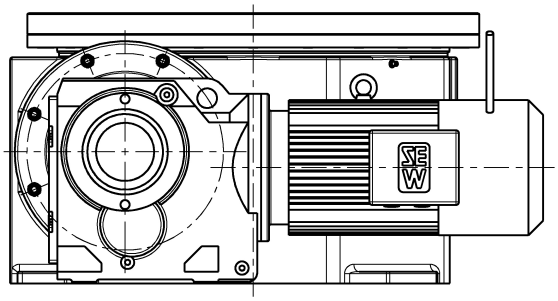

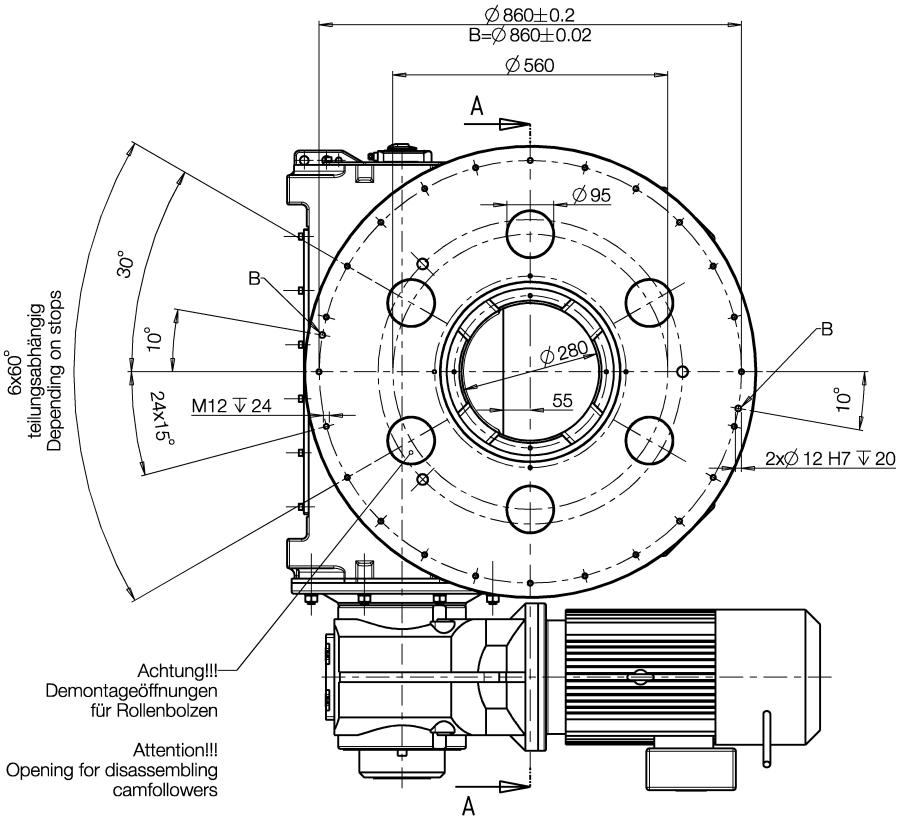
∅860±0.2
B=∅860±0.02
∅560
A
∅95
30°
B
10°
6x60°
teilungsabhängig
Depending on stops
∅280
B
24x15°
M12 ↧24
55
10°
2x∅12 H7 ↧20
Achtung!!!
Demontageöffnungen
für Rollenbolzen
Attention!!!
Opening for disassembling
camfollowers
A